NEMA FRAME ASSIGNMENTS

SINGLE-PHASE MOTORS HORIZONTAL AND VERTICAL

open

Design L, 60 cycles, class B insulation system, open type, 1.15 service factor.

hp	speed, rpm		
	3600	1800	1200
¾	–	–	145T
1	–	143T	182T
1½	143T	145T	184T
2	145T	182T	–
3	182T	184T	–
5	184T	213T	–
7½	213T	215T	–

POLYPHASE SQUIRREL-CAGE MOTORS HORIZONTAL AND VERTICAL

open type

Designs A and B—class B insulation system, open type 1.15 service factor, 60 cycles.

hp	speed, rpm			
	3600	1800	1200	900
½	–	–	–	143T
¾	–	–	143T	145T
1	–	143T	145T	182T
1½	143T	145T	182T	184T
2	145T	145T	184T	213T
3	145T	182T	213T	215T
5	182T	184T	215T	254T
7½	184T	213T	254T	256T
10	213T	215T	256T	284T
15	215T	254T	284T	286T
20	254T	256T	286T	324T
25	256T	284T	324T	326T
30	284TS	286T	326T	364T
40	286TS	324T	364T	365T
50	324TS	326T	365T	404T
60	326TS	364TS	404T	405T
75	364TS	365TS	405T	444T
100	365TS	404TS	444T	445T
125	404TS	405TS	445T	–
150	405TS	444TS	–	–
200	444TS	445TS	–	–
250	445TS†	–	–	–

fan-cooled

Designs A and B—class B insulation system totally-enclosed fan-cooled type, 1.00 service factor, 60-cycles.

hp	speed, rpm			
	3600	1800	1200	900
½	–	–	–	143T
¾	–	–	143T	145T
1	–	143T	145T	182T
1½	143T	145T	182T	184T
2	145T	145T	184T	213T
3	182T	182T	213T	215T
5	184T	184T	215T	254T
7½	213T	213T	254T	256T
10	215T	215T	256T	284T
15	254T	254T	284T	286T
20	256T	256T	286T	324T
25	284TS	284T	324T	326T
30	286TS	286T	326T	364T
40	324TS	324T	364T	365T
50	326TS	326T	365T	404T
60	364TS	364TS	404T	405T
75	365TS	365TS	405T	444T
100	405TS	405TS	444T	445T
125	444TS	444TS	445T	–
150	445TS	445TS	–	–

†The 250 hp rating at the 3600 rpm speed has a 1.0 service factor.
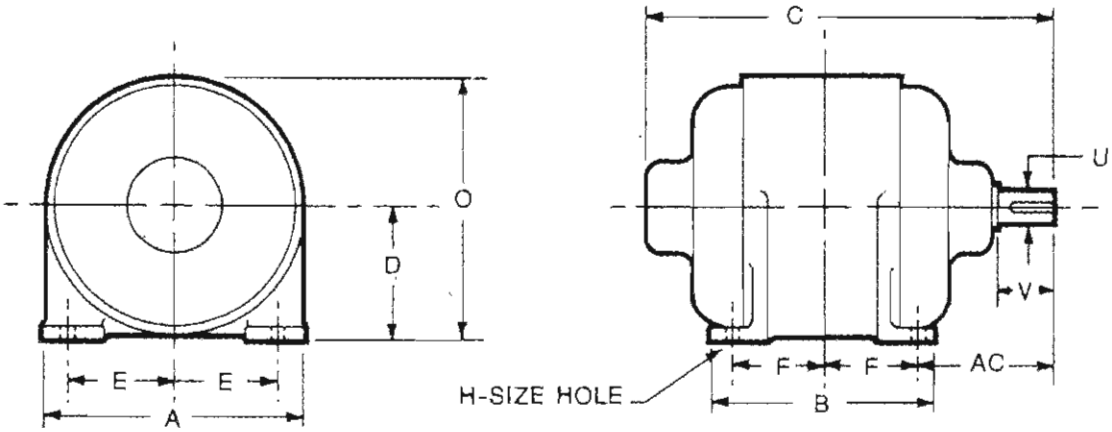
NEMA FRAME DIMENSIONS